5TH VENT
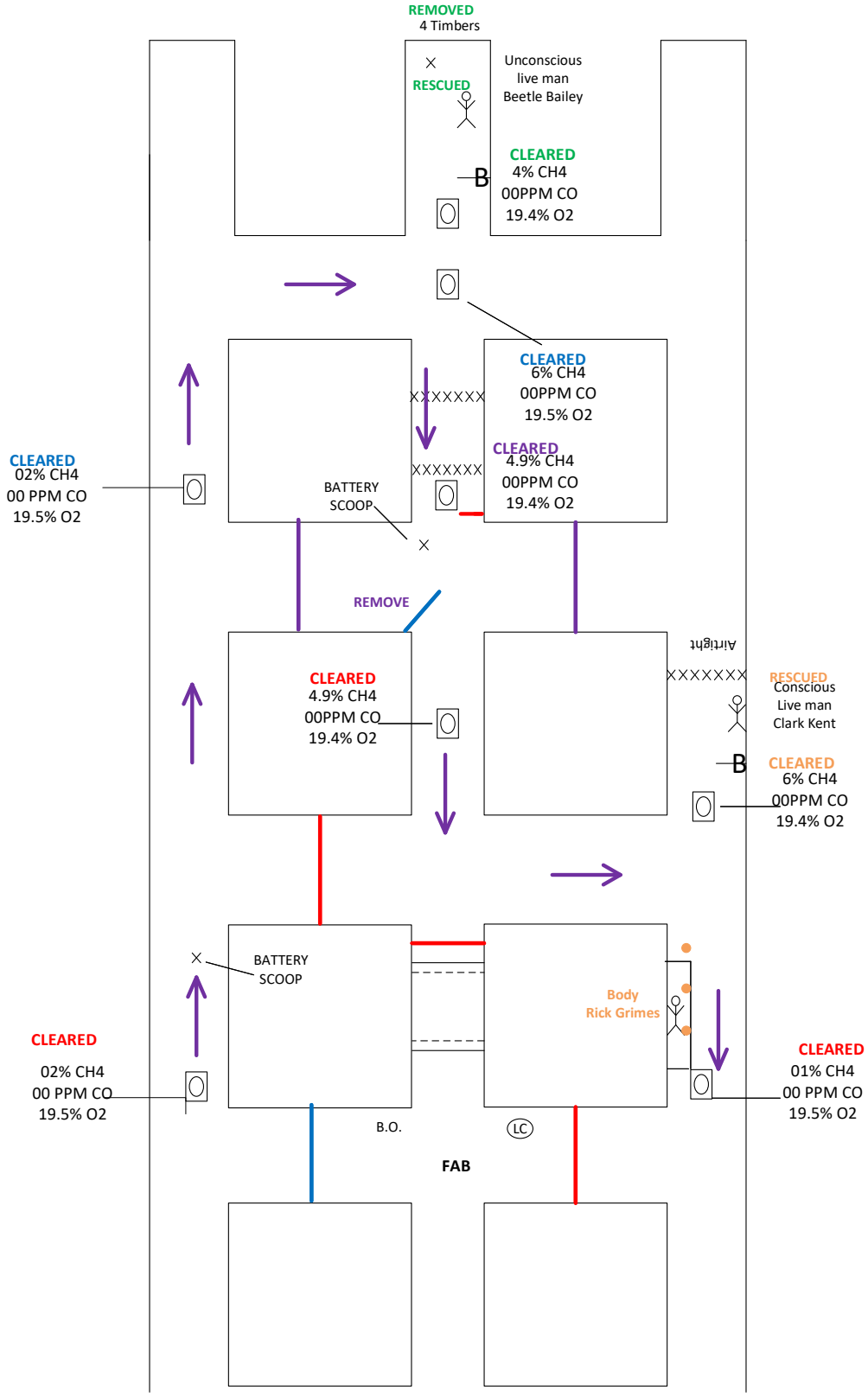
Day 1